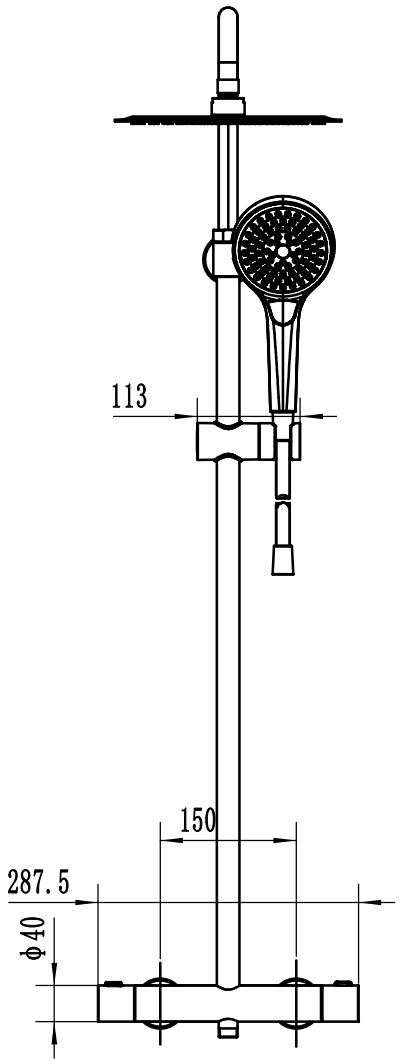

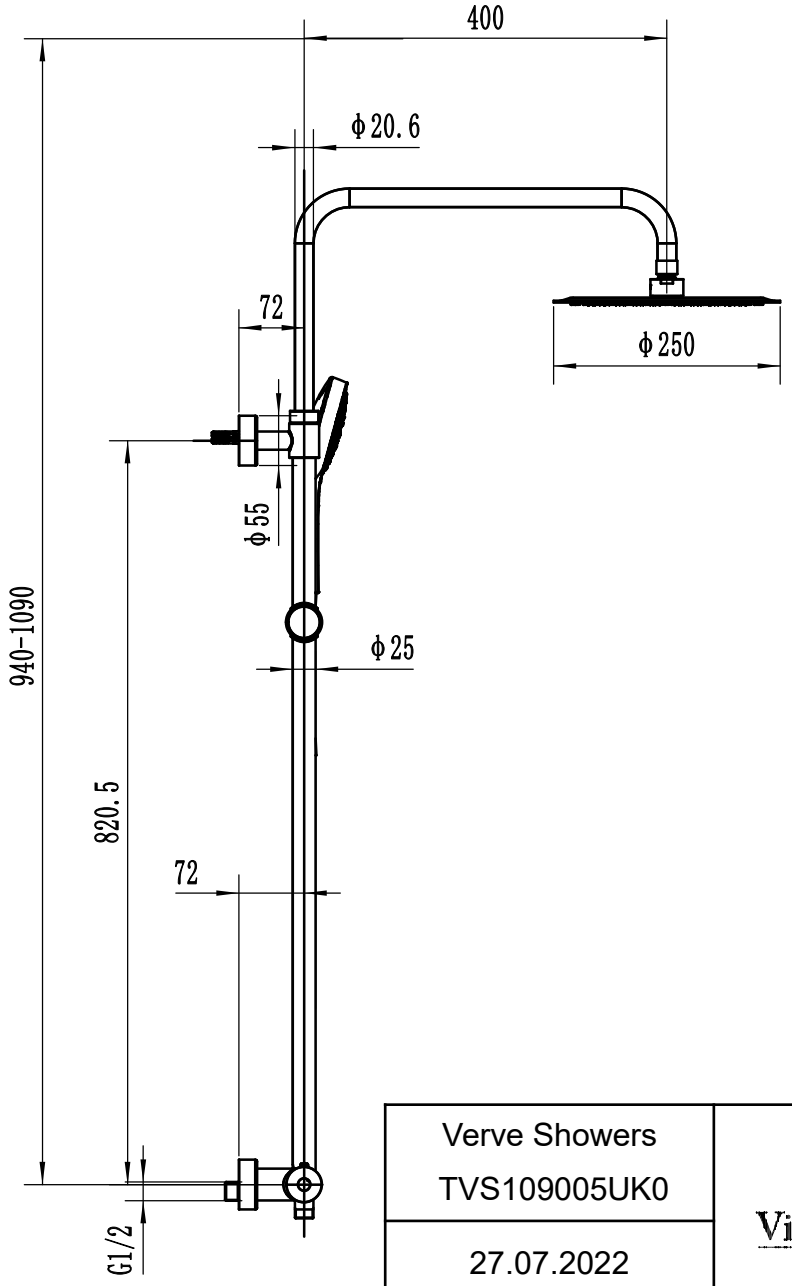

Verve Showers TVS109005UK0	Villeroy & Boch 1748
27.07.2022	